Hum Genet (1993) 92:421–423

human genetics

© Springer-Verlag 1993

Simultaneous detection of the two most frequent metachromatic leukodystrophy mutations

Johannes Berger[1], Brunhilde Molzer[1], Volkmar Gieselmann[2], Hanno Bernheimer[1]

[1] Neurologisches Institut der Universität Wien, Schwarzspanierstrasse 17, A-1090 Wien, Austria
[2] Biochemie II, Georg-August-Universität, Gosslerstrasse 12d, D-37073 Göttingen, Germany

Received: 10 March 1993

Abstract. Metachromatic leukodystrophy (MLD) is an autosomal recessive neurometabolic disorder caused by deficiency of arylsulfatase A (ASA). To detect ASA mutations E2S609 and E8P2382, the two most frequent MLD mutations, a non-radioactive polymerase chain reaction (PCR)-based assay was developed. This assay is a multiple "mutated primer-modulated PCR restriction fragment length polymorphism". The primers related to each mutation mismatch to create an *Xba*I or *Pst*I restriction site in mutation E2S609 or E8P2382, respectively. The assay was designed to give four fragments of 160, 130, 100, and 70 bp, easy to distinguish. An internal control fragment is not necessary since both primer pairs amplify different regions of the ASA gene and fragments will be obtained in all allelic possibilities. This technique produced clear-cut results when genomic DNA, isolated either from leukocytes, cultured human fibroblasts, or paraffin-embedded autopsy material, was used as template. The assay will be of help in comparative studies on the relation between MLD genotype and phenotype, a problem not yet fully understood. Since our method was shown to work also on DNA from paraffin-embedded autopsy material, genotype/phenotype studies would not be restricted to in vivo investigations but could be done also on post mortem material, thus including investigations on a large group of cases and also studies on the relation between genotype and neuropathological features.

Introduction

Metachromatic leukodystrophy (MLD) is an autosomal recessively inherited disorder with an estimated frequency of 1:40000 (Kolodny 1989). The cause of this fatal neurometabolic disease is the genetic deficiency of the enzyme arylsulfatase A (ASA), resulting in accumulation of the substrate cerebroside sulfuric ester (sulfatide) mainly in the nervous system. According to the age of onset there are three clinical variants of the disease: late infantile, juvenile, and adult type MLD (Kolodny 1989).

Correspondence to: J. Berger

So far eight MLD-related ASA mutations have been described (Gieselmann et al. 1991). These mutations can be divided functionally into two groups: alleles resulting in catalytically inactive ASA and alleles encoding for ASA with low residual enzyme activity. A genotype-phenotype relation was described by Polten et al. (1991): homozygosity for alleles encoding for catalytically inactive enzyme results in late infantile MLD, whereas the presence of two alleles encoding ASA with residual enzyme activity lead predominantly to adult MLD and, less frequently, to juvenile MLD. Juvenile MLD, however, occurs more frequently in compound heterozygotes bearing a mutation of each group.

The two most frequent MLD mutations accounting for about half of all MLD alleles (Polten et al. 1991) are E2S609 and E8P2382 (Fluharty et al. 1991). E2S609 is a point mutation (G→A) at nucleotide 609 which results in the loss of the splice donor site. In patients homozygous for this allele almost no ASA mRNA can be detected. Thus these patients are unable to synthesize ASA polypeptides. Therefore the E2S609 mutation leads, in homozygosity, to late infantile MLD (Gieselmann et al. 1991; Polten et al. 1991). The other frequent allele, E8P2382, is characterized by a C→A transition at nt 2382 causing the change of proline 426 to leucine. The gene product of this allele has enzyme activity but is highly unstable and causes, in homozygosity, the adult and, more rarely, the juvenile type of MLD (Polten et al. 1991). To allow a rapid detection of these two most frequent ASA alleles we developed a non-radioactive assay using a multiple "mutated primer-modulated PCR restriction fragment length polymorphism (PCR-RFLP)" based on a method described by Kumar and Dunn (1989). In this assay both mutants can be detected simultaneously in genomic DNA isolated from leukocytes, cultured human fibroblasts, and paraffin-embedded brain autopsy material, respectively.

Materials and methods

Genomic DNA was prepared by standard procedures (Maniatis et al. 1982) from the leukocytes or human fibroblasts, respectively,

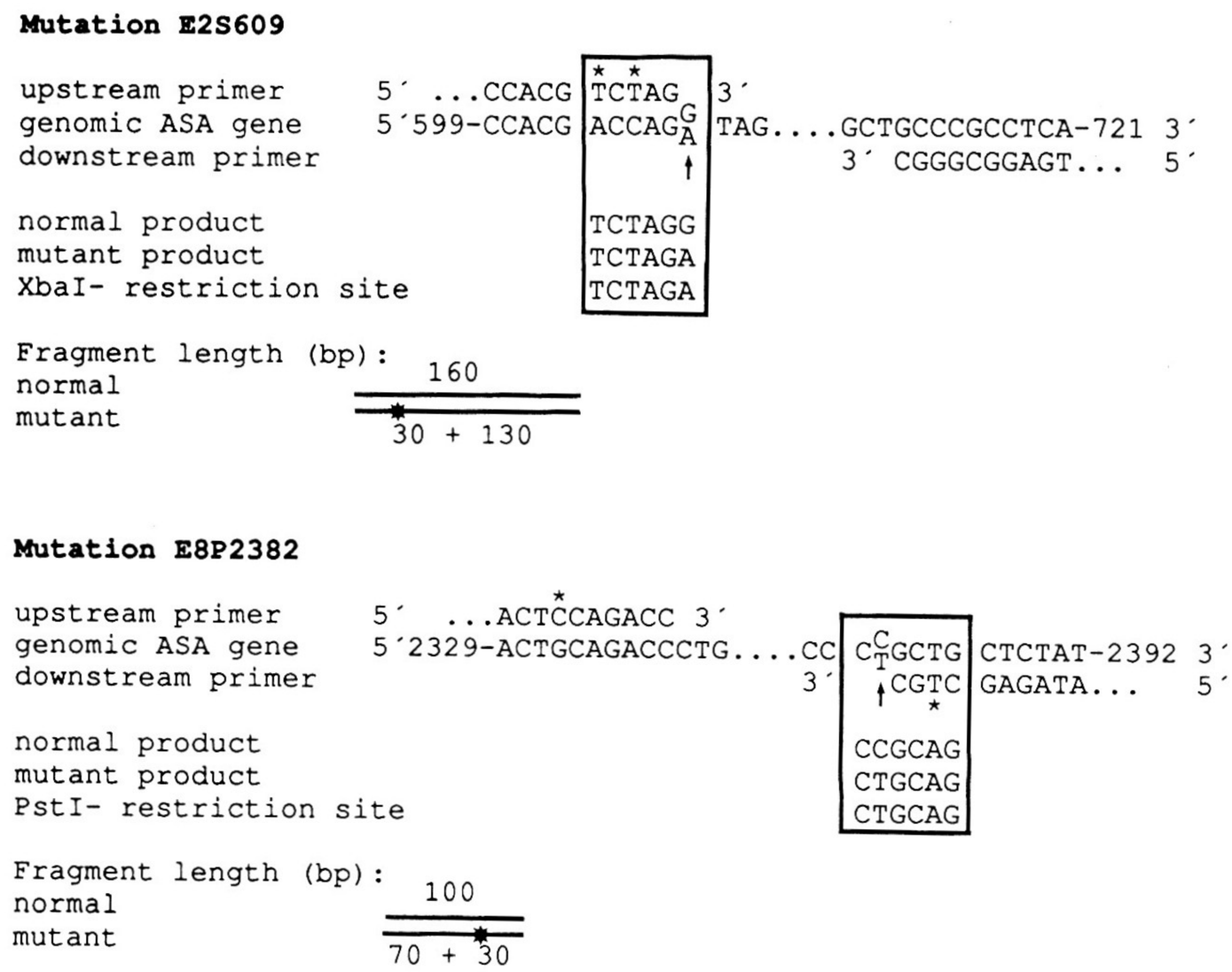

Fig. 1. Mutated primer-modulated PCR-RFLP assay of the ASA mutations E2S609 and E8P2382. The genomic ASA sequences in the area of the mutations and the ten most 3´ standing bases of the upstream and downstream primers are shown. Numbering is according to the genomic sequence. The substitutions causing either the E2S609 or the E8P2382 mutation are marked by *arrows*. *Asterisks* indicate mismatched nucleotides to create or avoid restriction sites. The normal and the mutant amplification products are shown along with the restriction site in the *boxed regions*. The normal and the mutant fragments are also shown

of six MLD patients and eight relatives heterozygous for MLD who had all been detected biochemically by assay of ASA activity and sulfatide excretion (Molzer et al. 1992). Genomic DNA was also extracted from paraffin-embedded formalin-fixed brain material from two MLD patients. For the assay from brain material, 20 paraffin sections of 5 µm were dewaxed five times in 1 ml xylene (20 min, 37°C). The residual xylene was removed by washing three times in 1 ml absolute ethanol. After vacuum desiccation, the sample was resuspended in 500 µl proteinase K solution (0.01 *M* Tris-HCl pH 8.0, 0.005 *M* EDTA, 0.5% SDS, 400 µg/ml proteinase K) and digested intensively at 55°C over night. Finally, DNA was extracted by phenol/chloroform, precipitated with ethanol, washed, and resolved in 20 µl water. To detect the mutation E2S609 the PCR upstream primer TTTCTAGGCATCCCG-TACTCCCACGTCTAG and downstream primer GGTTCTGGC-AGGGGCCCTGAGGCGGGC were used. The upstream primer matches a 30-mer sequence (nt 579 to nt 608) immediately 5´ to the E2S609-specific G→A mutation, except for two mismatched positions at nt 604 (A→T) and nt 606 (C→T). Elongation of these primers will lead by site-directed in vitro mutagenesis in the case of the mutation to a *Xba*I-site (T/CTAGA) inside the 160 bp amplification product. In carriers of the E2S609 allele, a 30 bp fragment is cut from the 160 bp PCR-amplification product and a 130 bp fragment remains (Fig. 1).

To detect the mutation E8P2382 the PCR upstream primer TCTGCCCACAGTGATACCACTCCAGACC and downstream primer CAGGGTCCTTGGACAGGTCATAGAGCTGC were used. The downstream primer matches a 29-mer sequence (nt 2383 to nt 2411) immediately 3´ to the E8P2382-specific (C→T) mutation except a mismatch on position nt 2385 (A→T). In the case of the mutant sequence (nt 2382 = T), the 100 bp PCR-amplification product contains a *Pst*I restriction site (CTGCA/G). To avoid an additional *Pst*I restriction site present in the genomic sequence the upstream primer mismatches nt 2332 (G→C). In E8P2382 the digestion of the 100 bp amplification product results in an 70 and a 30 bp fragment (Fig. 1).

Amplification of these two ASA fragments was performed in a total vol. of 100 µl containing 0.1–0.2 µg genomic DNA, 50 m*M* KCl, 10 m*M* TRIS-HCl (pH 8.3), 1 m*M* $MgCl_2$, 0.2 m*M* dNTP, 4% DMSO, and 10 pmol of each primer. After an initial denaturation for 10 min at 95°C, 2.5 U of Taq-polymerase were added by means of the hot start method. Thirty-five cycles of 1 min denaturation at 93.7°C, 1 min annealing at 55.8°C, and 1 min elongation at 72.5 min were performed.

25 µl amplification product was mixed with 3 µl of digestion buffer (40 m*M* $MgCl_2$, 500 m*M*, NaCl, and 10 m*M* β-mercaptoethanol), 1 µl *Xba*I (10 U) and 1 µl *Pst*I (10 U), and was incubated for 3 h at 37°C. Electrophoresis was carried out in a 7% polyacrylamide gel. DNA fragments were visualized by ethidium bromide staining.

Results and discussion

Preliminary experiments demonstrated that each of the mutations E2S609 and E8P2382 was detected correctly by the present method using either plasmids encoding the respective allele or a genomic DNA with confirmed sequences as templates.

The simultaneous detection of both mutations in one reaction is shown in Fig. 2. Figure 2A demonstrates DNA analysis in a patient with adult MLD (Fig. 2A; lane 3), his parents (lanes 1, 2), and his brothers (lanes 4, 5). In the patient the E8P2382-associated 100 bp fragment was completely cut into the 70 bp and the 30 bp fragments (the latter not to be seen), demonstrating that he is homozygous for the E8P2382 mutation (Fig. 2A, lane 3). All the relatives of the patients are heterozygous for this allele (Fig. 2A; lanes 1,2,4, and 5). In the patient, as well as his relatives, only the uncleaved E2S609-related 160 bp fragment is visible, indicating that they do not bear the E2S609 mutation.

Figure 2B presents DNA analysis in a juvenile MLD patient (lane 4), his parents (lanes 1, 2), and his siblings (lanes 3, 5). In the patient, four fragments (160, 130, 100, and 70 bp) are detectable, clearly demonstrating compound heterozygosity for the E2S609 and E8P2382 mutation (Fig. 2B, lane 4). All siblings inherited the E2S609 allele from their mother, whereas the father is carrier of the E8P2382 mutation (Fig. 2B).

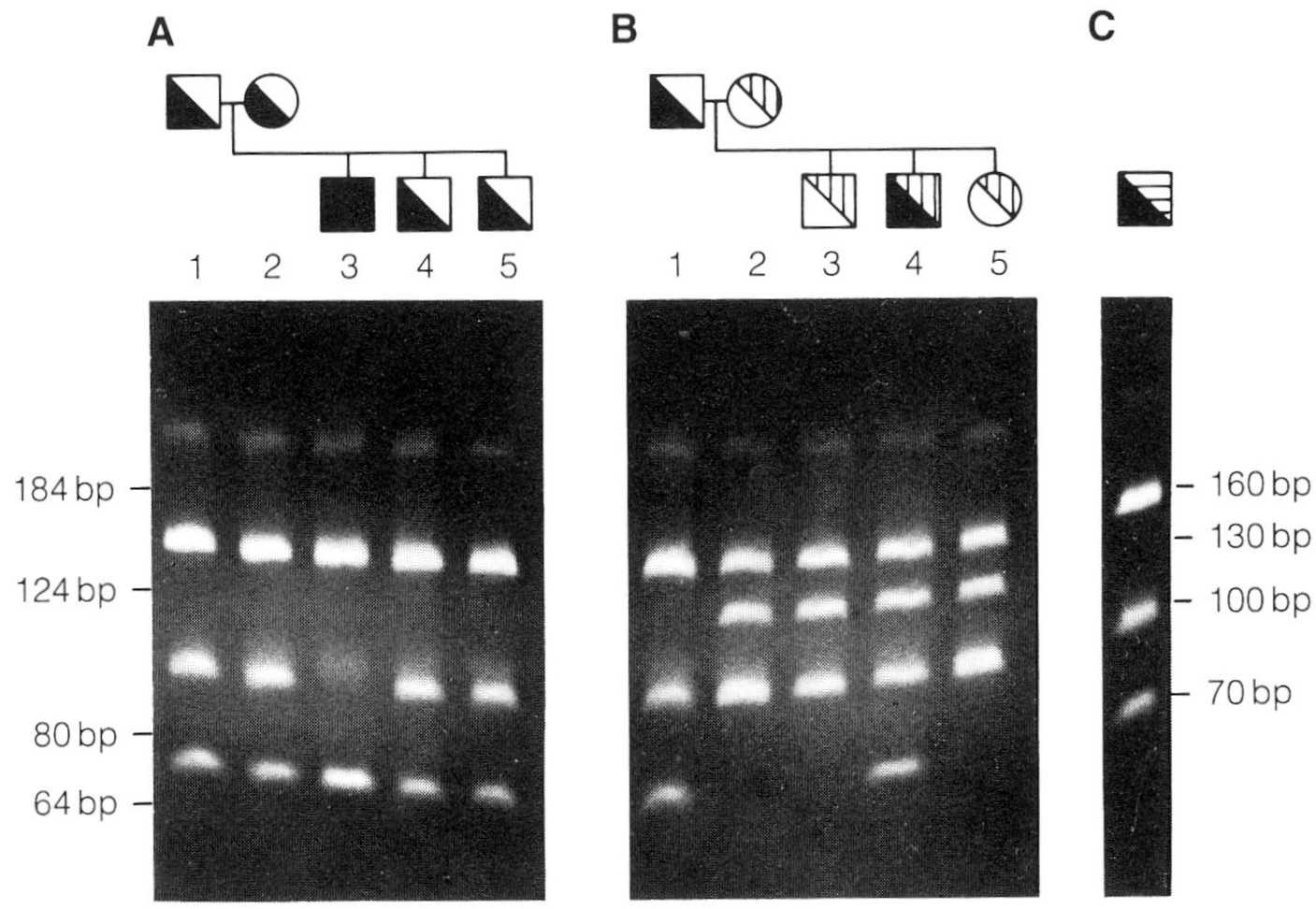

Fig. 2A–C. Electrophoresis of PCR-amplified genomic DNA digested with both *Pst*I and *Xba*I. The molecular weight markers are indicated on the *left*, and the E25609 (▥)-related, 160 bp and 130 bp fragments, as well as the E8P2382 (■)-related, 100 bp and 70 bp fragments on the *right*. **A** Patient with adult MLD (*lane 3*) and his relatives. Genomic DNA was from fibroblasts (patient) or from leukocytes (other probands). The patient is homozygous and his relatives are heterozygous for E8P2382. **B** Patient with juvenile MLD (*lane 4*) and his relatives. Genomic DNA was from fibroblasts (patient) or from leukocytes (other probands). The patient is a compound heterozygote for E8P2382 and E2S609. His mother and siblings are carriers of E2S609, his father is carrier of E8P2382. **C** Patient with adult MLD. Genomic DNA was from paraffin-embedded brain autopsy material. The patient is a compound heterozygote for E8P2382 and an unspecified mutant. □, wild type; ▤, unknown mutation

Figure 2C shows results of our assay with DNA from paraffin-embedded formalin-fixed brain autopsy material. This patient with adult MLD (Kothbauer et al. 1977) had died 27 years before the present investigation. DNA analysis revealed the E8P2382-related 70 bp as well as 100 bp fragments, whereas the E2S609-related 160 bp fragment remained uncleaved. Thus, the patient must have been a compound heterozygote for E8P2382 and another, hitherto unspecified, mutation.

In addition to the three cases reported above, further investigations were done in five MLD patients (four assays in fibroblasts and one in paraffin sections of brain autopsy material). Taking all eight MLD patients together, E2S609 was found four times and E8P2382 five times; thus, these two mutations occurred in 9 of 16 alleles.

Our present method is a rapid, non-radioactive assay for the simultaneous detection of the two most frequent MLD mutations. The assay was designed to give four fragments of 160, 130, 100, and 70 bp, easy to distinguish. An internal control fragment is not necessary since both primer pairs amplify different regions of the ASA gene, and fragments will be obtained in all allelic possibilities. Work is in progress to set up similar assays for the other ASA mutations. The assay, extended for other MLD mutations, will allow a rapid and simple genotype determination in MLD patients and heterozygotes. The assay may be of help in comparative studies on the relation between MLD genotype and phenotype, a problem not yet fully understood. Since our method has been shown to work also on DNA from paraffin-embedded autopsy material, genotype/phenotype studies would not be restricted to in vivo investigations but could be done also on post mortem material, thus including investigations on a large group of cases and also studies on the relation between genotype and neuropathological features.

Acknowledgements. We are grateful to Mrs. H. Flicker for preparation of the tissue section. This work was supported by "Anton Dreher-Gedächtnisschenkung für Medizinische Forschung", Project No.: 221/93.

References

Fluharty AL, Fluharty CB, Bohne W, Figura K von, Gieselmann V (1991) Two new arylsulfatase A mutations in a juvenile metachromatic leukodystrophy (MLD) patient. Am J Hum Genet 29:1340–1350

Gieselmann V, Polten A, Kreysing J, Kappler J, Fluharty A, Bohne W, Figura K von (1991) Mutations in arylsulfatase A alleles causing metachromatic leukodystrophy. Brain Dysf 4:235–243

Kolodny EH (1989) Metachromatic leukodystrophy and multiple sulfatase deficiency: sulfatide lipodosis. In: Scriver CR, Beaudet AL, Sly WS, Valle D, Stanbury JB, Wyngaarden JB, Fredrickson DS (eds) The metabolic basis of inherited disease, 6th edn. McGraw-Hill, New York, pp 1721–1750

Kothbauer P, Jellinger K, Gross H, Molzer B, Bernheimer H (1977) Adult metachromatic leukodystrophy manifested as schizophrenic psychosis. Arch Psychiat Nervenkr 224:379–387

Kumar R, Dunn LL (1989) Designed diagnostic restriction fragment length polymorphisms for the detection of point mutations in ras oncogenes. Oncogene Res 4:235–241

Maniatis T, Fritsch EF, Sambook J (1982) Molecular cloning: a laboratory manual. Cold Spring Harbor Laboratory Press, Cold Spring Harbor, NY

Molzer B, Sundt-Heller R, Kainz-Korschinsky M, Zobel M (1992) Elevated sulfatide excretion in heterozygotes of metachromatic leukodystrophy: dependence on reduction of arylsulfase A activity. Am J Med Gen 44:523–526

Polten A, Fluharty AL, Fluharty CB, Kappler J, Figura K von, Gieselmann V (1991) Molecular basis of different forms of metachromatic leukodystrophy. N Engl J Med 324:18–22